SICMEMOTORI

WIND OF INNOVATION

Technical Catalogue

Code C-AD-355-560-E-11

A.C. MOTORS FRAMES 355-560

Large three-phase squirrel cage asynchronous motors
AD Series

355kW ÷ 1500kW (1500rpm)

for inverter duty

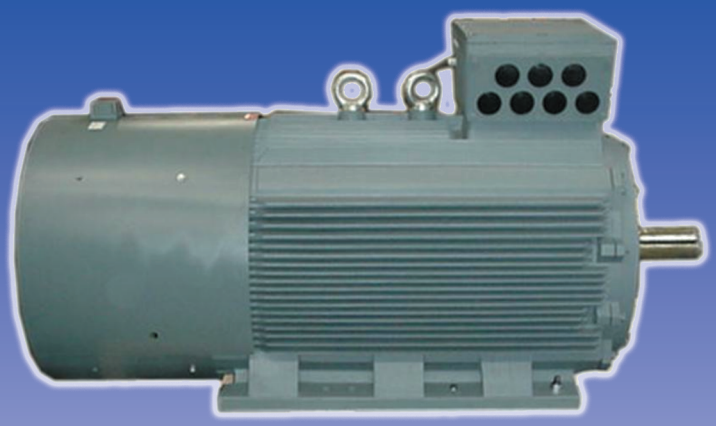

CSQ

www.imq.it

CISQ is a member of IQNet

THE INTERNATIONAL CERTIFICATION NETWORK

www.iqnet-certification.com

IQNet, the association of the world's first class certification bodies, is the largest provider of management System Certification in the world. IQNet is composed of more than 30 bodies and counts over 150 subsidiaries all over the globe.

CERTIFICATO N.
CERTIFICATE N. **9101.SMOT**

SI CERTIFICA CHE IL SISTEMA QUALITA' DI
WE HEREBY CERTIFY THAT THE QUALITY SYSTEM OPERATED BY

SICME MOTORI SRL

STRADA DEL FRANCESE 130 - 10156 TORINO (TO)

UNITA' OPERATIVE
OPERATIVE UNITS

STRADA DEL FRANCESE 123-126-130 - 10156 TORINO (TO)

E' CONFORME ALLA NORMA
IS IN COMPLIANCE WITH THE STANDARD

ISO 9001:2008

PER LE SEGUENTI ATTIVITA'
FOR THE FOLLOWING ACTIVITIES

Progettazione, produzione e vendita di motori e generatori elettrici:
a corrente continua, corrente alternata, sincroni a magneti permanenti, a riluttanza
Design, engineering, production and sale of direct current motors and generators: alternate current, permanent magnets synchronous, reluctance

Riferirsi al manuale della qualità per l'applicabilità dei requisiti della norma ISO 9001:2008
Refer to quality manual for details of applications to ISO 9001:2008 requirements

IL PRESENTE CERTIFICATO E' SOGGETTO AL RISPETTO DEL REGOLAMENTO
PER LA CERTIFICAZIONE DEI SISTEMI DI QUALITA' E DI GESTIONE DELLE AZIENDE

THE USE AND THE VALIDITY OF THE CERTIFICATE SHALL SATISFY THE REQUIREMENTS OF THE RULES FOR THE CERTIFICATION OF COMPANY QUALITY AND MANAGEMENT SYSTEM

PRIMA EMISSIONE	EMISSIONE CORRENTE	DATA SCADENZA
FIRST ISSUE	*CURRENT ISSUE*	*EXPIRY DATE*
1991-05-16	2010-09-03	2011-07-30

IMQ S.p.A.- VIA QUINTILIANO, 43 - 20138 MILANO ITALY

CISQ è la Federazione Italiana di Organismi di Certificazione dei sistemi di gestione aziendale

CISQ is the Italian Federation of management system Certification Bodies

SINCERT EA: 19

SGQ N°005A, SGA N°006D, SCR N°005F, SSI N°03G, PRD N°005B

Membro degli Accordi di Mutuo Riconoscimento EA e IAF
Signatory of EA and IAF Mutual Recognition Agreements

La validità del presente certificato è subordinata a sorveglianza annuale e al riesame completo del Sistema di Qualità con periodicità triennale secondo le procedure dell'IMQ

The validity of the certificate is submitted to annual audit and a reassessment of the entire Quality System within three years according to IMQ rules

FEDERAZIONE CISQ

www.cisq.com

Declaration of conformity

The motors described in this catalogue satisfy the essential requisites of the following Directives:
- 72/23/EEC Low Voltage Directive

Reference has also been made to the following directives, specifically for the reasons listed as follows:
- EMC 89/336/EEC (Electromagnetic Compatibility) Directive
- 2006/42/CE Machinery Directive

The electric motors/generators are components that are incorporated into other machines, systems and plants and therefore the resulting EMC behaviour is under the responsibility of the Manufacturer of the machine or plant incorporating the motor/generator.

With reference to the 2006/42/EC Directive, it must be specified that the motors/generators must be installed in compliance with the installation instructions and cannot be put into service until the machine in which they are incorporated has been declared in compliance with the 2006/42/EC Machinery Directive.

AD SERIES – 355÷560 Large three-phase ac motors for inverter duty

SICMEMOTORI, among the European leaders for variable speed applications, presents this series of large three-phase heavy duty asynchronous motors, expressly designed for inverter duty.
Designing and manufacturing characteristics, together with materials utilised for the construction of these motors, make this series one of the most advanced actually available on the market

Main technical features

Frames 355÷560
Squirrel cage rotor
Class F insulation
Class F temperature rise when inverter supplied
Class B temperature rise when grid connected
Insulation and impregnation expressly designed for inverter duty
Insulated bearing
Dimensions according to IEC 60072 Std.
Ratings and performances according to IEC 60034-1Std.
Degree of protection IP55 (IEC 60034-5 Std.)
Type of cooling IC411 and IC416 (IEC 60034-6 Std.)
Terminal box (degree of protection IP55) on top
Mounting arrangements IM1001 (B3), IM2001 (B35), IM3011(V1) and derivated (IEC 60034-7 Std.)
Half-key balancing
Metallic name plate
Low noise level (IEC 60034-9 Std.)
Constant torque speed regulation (with inverter supply) down to 25Hz for IC411 selfventilated motors
Constant torque speed regulation (with inverter supply) down to 5Hz for IC416 forced ventilated motors
Constant power speed regulation (with inverter supply) up to 75Hz (max. speed must be compatible with table at page 11).
Final colour grey RAL7031
All motors are in conformity with European Directives and are CE marked.

Motors can run(when grid connected) with voltage variation of ± 10% and frequency variation of ± 5% with a maximum combined variation of ± 10%, with temperature rise in compliance with IEC Standards.

Sound pressure

Motor type	Synchronous speed (rpm)					
	3000	1500	1000	750	600	500
	Sound pressure level (dBA)					
AD 355	94	87	80	75	70	70
AD 400	95	88	82	78	73	73
AD 450	93	93	89	84	80	77
AD 500	---	94	90	90	88	88
AD 560	---	97	90	89	86	80

Bearings

Motor type	Poles	Mounting B3 (IM1001) – B35 (IM2001)				Mounting V1 (IM3011)	
		Drive End		Non Drive End	Non Drive End Insulated bearing	Drive End	Non Drive End
		Ball	Roller	Ball	Ball	Ball	Ball
AD 355	2	6317 C3	---	6317 C3	6317 MC3 VL0241	---	---
	4 ÷ 12	6322 C3	NU322	6322 C3	6322 MC3 VL0241	6322 C3	7322B
AD 400	2	6317 C3	---	6317 C3	6317 MC3 VL0241	---	---
	4 ÷ 12	6326 C3	NU326	6326 C3	6326 MC3 VL0241	6326 C3	7326B
AD 450	2	6220 C3	---	6220 C3	6320 MC3 VL0241	---	---
	4 ÷ 12	6328 C3	NU328	6328 C3	6328 MC3 VL0241	6328 C3	7328B
AD 500	2	---	---	---	---	---	---
	4 ÷ 12	6330 C3	NU330	6330 C3	6330 MC3 VL0241	6330 C3	7330B
AD 560	2	---	---	---	---	---	---
	4 ÷ 12	6334 C3	NU334	6330 C3	6330 MC3 VL0241	6334 C3	7330B

Transport locking: all motors with an “NU bearing” or an “Angular contact bearing” are fitted with a transport locking device to prevent damage to the bearings due to vibrations during transport.

Frequency drive: for all motors driven by a frequency converter an insulated bearing at the NDE side is mounted. For motors in V1 mounting, the insulated bearing Is mounted at the DE side, and the "angular contact bearing" at the NDE side

All AD motors are supplied with insulated bearing as standard

Inverter duty

The AD series AC motors are designed and manufactured expressely for inverter duty, referring to the IEC guidelines (EN60034-25).
VPI impregnation assures the maximum performances and together with the insulated materials and the upgraded special double coated copper wire give the best possible behaviour when the motors are supplied by vector-control inverter.
It is advisable that max dV/dt at motor terminals is 2kV/µsec (voltage 400V) or 1,5kV/µsec (690V).

Ratings and technical data

The tables of technical data are referred tocontinuous duty S1, an ambient temperature of 40℃ and an altitude up to 1000 m.a.s.l..
In different environmental conditions output ratings vary, and are obtainable by applying the factors showed in table 6, maintaining the temperature rise within the B insulation class (F insulation class when inverter supplied).

Altitude m.a.s.l.	Ambient temperature (℃)					
	30	30-40	45	50	55	60
<= 1000	1.06	1	0.97	0.94	0.90	0.87
1500	1.04	0.97	0.94	0.91	0.87	0.84
2000	1	0.95	0.92	0.88	0.84	0.81
3000	0.96	0.89	0.86	0.82	0.78	0.74
4000	0.91	0.84	0.80	0.76	0.72	0.67

Technical data tables key-words

Motor type	Rated power	Rated current In		Rated speed	Rated torque Tn	Power factor	Efficiency	Istart/In	Tstart/Tn	Tmax/Tn	Moment of inertia J	Weight
AD	(kW)	400V (A)	690V (A)	rpm	Nm	Cosø	η (%)				(Kgm^2)	(kg)

Rated Power	:	Nominal mechanical power to the motor shaft
Rated current	:	Nominal current
Rated speed	:	Nominal speed
Rated torque	:	Nominal torque at the motor shaft
Power factor	:	Power factor at full load
Efficiency	:	Efficiency at full load
Istart/In	:	Starting current versus Nominal current
Tstart/Tn	:	Starting torque versus Nominal torque
Moment of inertia	:	Rotor inertia
Weight	:	Motor weight

Informations given in tables are indicative, certified values are available on request.
***SICMEMOTORI** reserves the right to modify designing, technical features and dimensions without prior notice.*

LARGE 3-PHASE AC MOTORS FOR INVERTER DUTY OR GRID CONNECTED TECHNICAL DATA

2 Poles - 50Hz - 3000rpm

Motor type	Rated power	Rated current In		Rated speed	Rated torque Tn	Power factor	Efficiency	Istart/In	Tstart/Tn	Tmax/Tn	Moment of inertia J	Weight
AD	(kW)	400V (A)	690V (A)	rpm	Nm	Cosø	η (%)				(Kgm^2)	(kg)
355 XA2	**355**	596	345	2975	1140	0,90	95,6	7,0	1,6	2,0	5,0	2100
355 XB2	**400**	674	389	2975	1285	0,90	95,6	7,0	1,6	2,0	5,3	2180
355 XC2	**450**	756	437	2975	1445	0,90	95,8	7,0	1,6	2,0	5,9	2340
355 XD2	**500**	840	485	2975	1606	0,90	95,8	7,0	1,6	2,0	6,4	2520
400 XA2	**560**	944	545	2980	1796	0,90	95,5	7,5	1,2	2,6	8,6	3200
400 XB2	**630**	1061	613	2980	2020	0,90	95,6	7,5	1,2	2,6	9,6	3490
400 XC2	**710**	---	690	2980	2277	0,90	95,6	7,5	1,2	2,6	11,0	3660
450 XA2	**800**	---	778	2985	2561	0,90	95,6	7,5	0,8	2,0	28,8	5000
450 XB2	**900**	---	872	2985	2881	0,90	96,0	7,5	0,8	2,0	32,5	5200

4 Poles – 50HZ - 1500rpm

Motor type	Rated power	Rated current In		Rated speed	Rated torque Tn	Power factor	Efficiency	Istart/In	Tstart/Tn	Tmax/Tn	Moment of inertia J	Weight
AD	(kW)	400V (A)	690V (A)	rpm	Nm	Cosø	η (%)				(Kgm^2)	(kg)
355 XA4	**355**	615	357	1485	2284	0,87	95,7	7,0	1,8	2,0	9,5	2200
355 XB4	**400**	696	402	1485	2574	0,87	95,7	7,0	1,8	2,0	10,6	2300
355 XC4	**450**	782	452	1485	2896	0,87	95,8	7,0	1,8	2,0	11,5	2460
355 XD4	**500**	869	502	1485	3217	0,87	95,8	7,8	1,8	2,0	12,8	2720
400 XA4	**560**	950	548	1490	3591	0,89	96,0	7,0	1,3	2,6	17,1	3360
400 XB4	**630**	1069	617	1490	4040	0,89	96,0	7,0	1,3	2,6	18,5	3430
400 XC4	**710**	---	694	1490	4553	0,89	96,2	7,0	1,3	2,6	21,1	3620
450 XA4	**800**	---	805	1490	5130	0,87	95,6	7,5	1,1	2,0	36,2	5200
450 XB4	**900**	---	902	1490	5772	0,87	96,0	7,5	1,1	2,0	40,3	5500
500 XA4	**1000**	---	1007	1490	6413	0,87	95,5	7,0	0,7	2,2	60,0	6750
500 XB4	**1120**	---	1114	1490	7182	0,88	95,6	7,5	0,7	2,2	68,0	7250
500 XC4	**1250**	---	1242	1490	8016	0,88	95,7	8,5	0,7	2,5	78,0	7500
560 XA4	**1400**	---	1377	1490	8978	0,89	95,6	6,5	0,9	2,0	82,5	8570
560 XB4	**1500**	---	1475	1490	9619	0,89	95,6	6,5	0,9	2,0	91,0	8700

Informations given in tables are indicative, certified values are available on request.
***SICMEMOTORI** reserves the right to modify designing, technical features and dimensions without prior notice.*

LARGE 3-PHASE AC MOTORS FOR INVERTER DUTY OR GRID CONNECTED TECHNICAL DATA

6 Poles – 50HZ - 1000rpm

Motor type	Rated power	Rated current In		Rated speed	Rated torque Tn	Power factor	Efficiency	Istart/In	Tstart/Tn	Tmax/Tn	Moment of inertia J	Weight
AD	(kW)	400V (A)	690V (A)	rpm	Nm	Cosø	η (%)				(Kgm^2)	(kg)
355 XB6	**315**	564	326	990	3040	0,85	95,2	6,5	1,8	2,0	13,5	2310
355 XC6	**355**	635	367	990	3426	0,85	95,3	6,5	1,8	2,0	14,3	2490
355 XD6	**400**	716	413	990	3861	0,85	95,3	6,5	1,8	2,0	15,4	2630
400 XA6	**450**	793	458	990	4343	0,86	95,6	6,8	1,3	2,6	23,5	3660
400 XB6	**500**	880	508	990	4826	0,86	95,7	6,8	1,3	2,6	26,4	3750
400 XC6	**560**	986	569	990	5405	0,86	95,7	6,8	1,3	2,6	28,8	3820
450 XA6	**630**	1160	670	990	6081	0,83	94,8	7,0	1,1	1,8	46,4	4800
450 XB6	**710**	---	752	990	6853	0,83	95,2	7,0	1,1	1,8	50,2	5200
450 XC6	**800**	---	845	990	7721	0,83	95,5	7,0	1,1	1,8	56,7	5600
500 XB6	**900**	---	938	990	8687	0,84	95,6	7,0	0,8	2,2	89,0	6750
500 XC6	**1000**	---	1042	990	9652	0,84	95,6	7,5	0,8	2,2	98,0	7150
500 XD6	**1120**	---	1166	990	10810	0,84	95,7	7,5	0,8	2,2	105,0	7250
560 XA6	**1250**	---	1286	995	12004	0,85	95,7	6,5	0,8	1,8	105,0	8200
560 XB6	**1400**	---	1436	995	13445	0,85	96,0	7,0	0,8	1,8	130,0	8500

8 Poles – 50HZ - 750rpm

Motor type	Rated power	Rated current In		Rated speed	Rated torque Tn	Power factor	Efficiency	Istart/In	Tstart/Tn	Tmax/Tn	Moment of inertia J	Weight
AD	(kW)	400V (A)	690V (A)	rpm	Nm	Cosø	η (%)				(Kgm^2)	(kg)
355 XB8	**250**	496	287	740	3228	0,77	94,8	6,5	1,6	2,0	14,3	2410
355 XC8	**280**	555	320	740	3615	0,77	95,0	6,5	1,8	2,0	15,0	2600
355 XD8	**315**	624	360	740	4067	0,77	95,0	6,5	1,8	2,0	15,9	2750
400 XA8	**355**	652	377	740	4584	0,83	95,0	6,0	1,2	2,4	24,2	3350
400 XB8	**400**	735	424	740	5165	0,83	95,0	6,0	1,2	2,4	26,0	3430
400 XC8	**450**	825	477	740	5811	0,83	95,2	6,0	1,2	2,4	29,0	3760
450 XA8	**500**	1014	586	745	6413	0,76	94,0	7,0	1,1	1,8	48,5	4900
450 XB8	**560**	1130	652	745	7182	0,76	94,5	7,0	1,1	1,8	52,1	5300
500 XA8	**630**	---	681	740	8135	0,81	94,5	7,0	0,8	2,2	88,0	6750
500 XB8	**710**	---	768	740	9168	0,81	95,5	7,0	0,8	2,2	92,0	7000
500 XC8	**750**	---	811	740	9684	0,81	95,5	7,0	0,8	2,2	92,0	7100
500 XD8	**800**	---	864	740	10330	0,81	95,6	7,0	0,8	2,2	105,0	7250
560 XA8	**900**	---	974	745	11543	0,81	95,5	5,5	0,8	1,8	135,0	8000
560 XB8	**1000**	---	1079	745	12826	0,81	95,7	5,5	0,8	1,8	160,0	8500
560 XC8	**1120**	---	1209	745	14365	0,81	95,7	5,5	0,8	1,8	160,0	8650

Informations given in tables are indicative, certified values are available on request.
***SICMEMOTORI** reserves the right to modify designing, technical features and dimensions without prior notice.*

LARGE 3-PHASE AC MOTORS FOR INVERTER DUTY OR GRID CONNECTED TECHNICAL DATA

10 Poles – 50HZ - 600rpm

Motor type	Rated power	Rated current In		Rated speed	Rated torque Tn	Power factor	Efficiency	Istart/In	Tstart/Tn	Tmax/Tn	Moment of inertia J	Weight
AD	(kW)	400V (A)	690V (A)	rpm	Nm	Cosø	η (%)				(Kgm^2)	(kg)
355 XA10	**160**	326	189	590	2589	0,75	94,5	5,5	1,2	1,8	13,2	2050
355 XB10	**180**	368	213	590	2915	0,75	94,5	5,5	1,2	1,8	15,6	2150
355 XC10	**200**	408	236	590	3240	0,75	94,7	5,5	1,2	1,8	17,8	2230
355 XD10	**225**	459	265	590	3644	0,75	94,7	5,5	1,2	1,8	19,4	2410
355 XE10	**250**	509	294	590	4049	0,75	95,0	5,5	1,2	1,8	21,3	2600
400 XA10	**225**	430	249	590	3641	0,80	94,5	5,5	1,0	2,3	19,5	3020
400 XB10	**250**	476	276	590	4046	0,80	95,0	5,5	1,0	2,3	25,6	3220
400 XC10	**280**	534	308	590	4535	0,80	95,0	5,5	1,0	2,3	25,6	3220
400 XD10	**315**	601	347	590	5102	0,80	95,0	5,5	1,0	2,3	26,9	3450
450 XA10	**355**	731	422	595	5701	0,75	93,8	6,5	0,9	1,8	42,5	5100
450 XB10	**400**	821	474	595	6424	0,75	94,2	6,5	0,9	1,8	46,2	5400
450 XC10	**450**	920	531	595	7227	0,75	94,5	6,5	0,9	1,8	50,2	5700
500 XA10	**500**	---	548	590	8098	0,80	95,4	7,0	1,0	2,2	98,0	6650
500 XB10	**560**	---	614	590	9069	0,80	95,4	7,0	1,0	2,2	110,0	6850
500 XC10	**630**	---	690	590	10203	0,80	95,5	7,0	1,0	2,2	125,0	7000
560 XA10	**710**	---	764	595	11402	0,81	96,0	5,0	0,9	1,8	136,0	6880
560 XB10	**800**	---	859	595	12847	0,81	96,2	5,0	0,9	1,8	154,1	7080
560 XC10	**900**	---	963	595	14453	0,81	96,5	5,0	0,9	1,8	175,2	7350

12 Poles – 50HZ - 500rpm

Motor type	Rated power	Rated current In		Rated speed	Rated torque Tn	Power factor	Efficiency	Istart/In	Tstart/Tn	Tmax/Tn	Moment of inertia J	Weight
AD	(kW)	400V (A)	690V (A)	rpm	Nm	Cosø	η (%)				(Kgm^2)	(kg)
355 XA12	**132**	290	167	490	2574	0,71	93,0	5,0	1,0	1,8	13,5	2145
355 XB12	**160**	351	203	490	3120	0,71	93,0	5,0	1,0	1,8	15,8	2210
355 XC12	**180**	395	228	490	3510	0,71	93,0	5,0	1,0	1,8	18,5	2410
400 XA12	**200**	417	241	490	3900	0,74	94,0	5,5	1,0	2,0	24,8	3220
400 XB12	**225**	468	270	490	4388	0,74	94,2	5,5	1,0	2,0	25,6	3450
450 XA12	**250**	530	306	495	4826	0,73	93,6	6,0	0,8	1,8	48,3	5400
450 XB12	**280**	591	341	495	5405	0,73	94,0	6,0	0,8	1,8	53,2	5800
450 XC12	**315**	663	383	495	6081	0,73	94,3	6,0	0,8	1,8	59,4	6200
500 XA12	**355**	712	411	490	6923	0,76	95,1	6,0	0,8	1,8	100,0	6500
500 XB12	**400**	801	463	490	7800	0,76	95,2	6,0	0,8	1,8	112,0	6750
500 XC12	**450**	900	520	490	8775	0,76	95,3	6,0	0,8	1,8	126,0	6950
560 XA12	**500**	987	572	495	9652	0,77	95,0	6,5	0,8	1,8	135,0	6900
560 XB12	**560**	1105	641	495	10810	0,77	95,0	6,5	0,8	1,8	152,0	7100
560 XC12	**630**	1239	718	495	12161	0,77	95,3	6,5	0,8	1,8	172,0	7500

Informations given in tables are indicative, certified values are available on request.
***SICMEMOTORI** reserves the right to modify designing, technical features and dimensions without prior notice.*

Mounting arrangement IM1001 (B3) – IC411

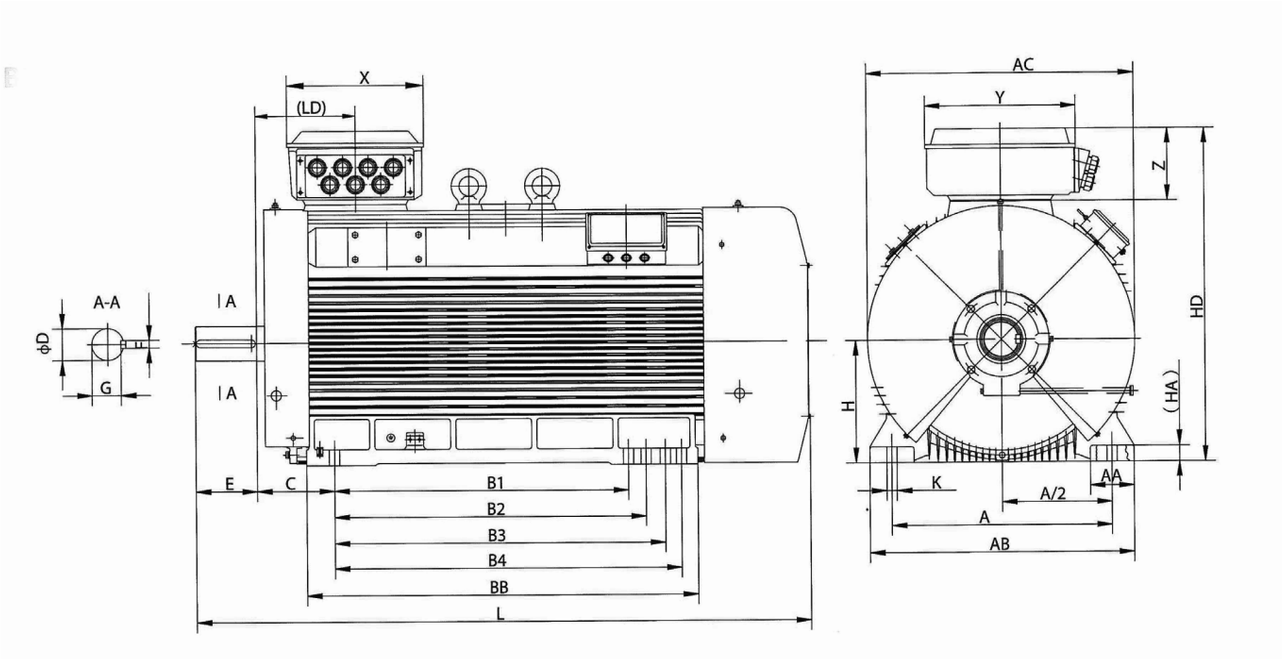

Frame size	Poles	Mounting dimensions (mm)											
		A	B1	B2	B3	B4	C	D	E	F	G	H	K
355	2	630	630	710	800	---	254	75	140	20	67,5	355	35
	4 ÷ 12	630	630	710	800	---	254	95	170	25	86	355	35
400	2	686/710	710	800	900	---	280	80	170	22	71	400	35x47
	4 ÷ 12	686/710	710	800	900	---	280	110	210	28	100	400	35x47
450	2	800	900	1000	1120	1250	280	95	170	25	86	450	35
	4 ÷ 12	800	900	1000	1120	1250	280	120	210	32	109	450	35
500	4 ÷ 12	900	1250	---	---	---	315	140	250	36	128	500	42x60
560	4 ÷ 12	1000	1400	---	---	---	355	160	300	40	147	560	42x52

Frame size	Poles	Overall dimensions (mm)										
		AB	AC	HD	BB	LD	HA	AA	X	Y	Z	L
355	2	760	790	1020	1140	368	52	135	430	545	250	1870
	4 ÷ 12	760	790	1020	1140	368	52	135	430	545	250	1900
400	2	870	864	1100	1120	362	45	160	430	545	246	1980
	4 ÷ 12	870	864	1100	1120	362	45	160	430	545	246	2025
450	2	980	1035	1290	1495	400	45	225	560	615	300	2360
	4 ÷ 12	980	1035	1290	1495	400	45	225	560	615	300	2400
500	4 ÷ 12	1080	1095	1365	1600	412	65	180	560	615	300	2550
560	4 ÷ 12	1170	1195	1480	1680	410	76	210	560	615	300	2610

Cable glands : 7 – M63 x 1,5

Mounting arrangement IM1001 (B3) – IC416

When independent axial forced ventilation is required, dimension “L” changes as indicated in the table below:

Frame size	Poles	L
355	2	2050
	4 ÷ 12	2080
400	2	2230
	4 ÷ 12	2255
450	2	2660
	4 ÷ 12	2700
500	4 ÷ 12	2850
560	4 ÷ 12	2910

Informations given in tables are indicative, certified values are available on request.
***SICMEMOTORI** reserves the right to modify designing, technical features and dimensions without prior notice.*

Mounting arrangement IM2001 (B35) – IC411

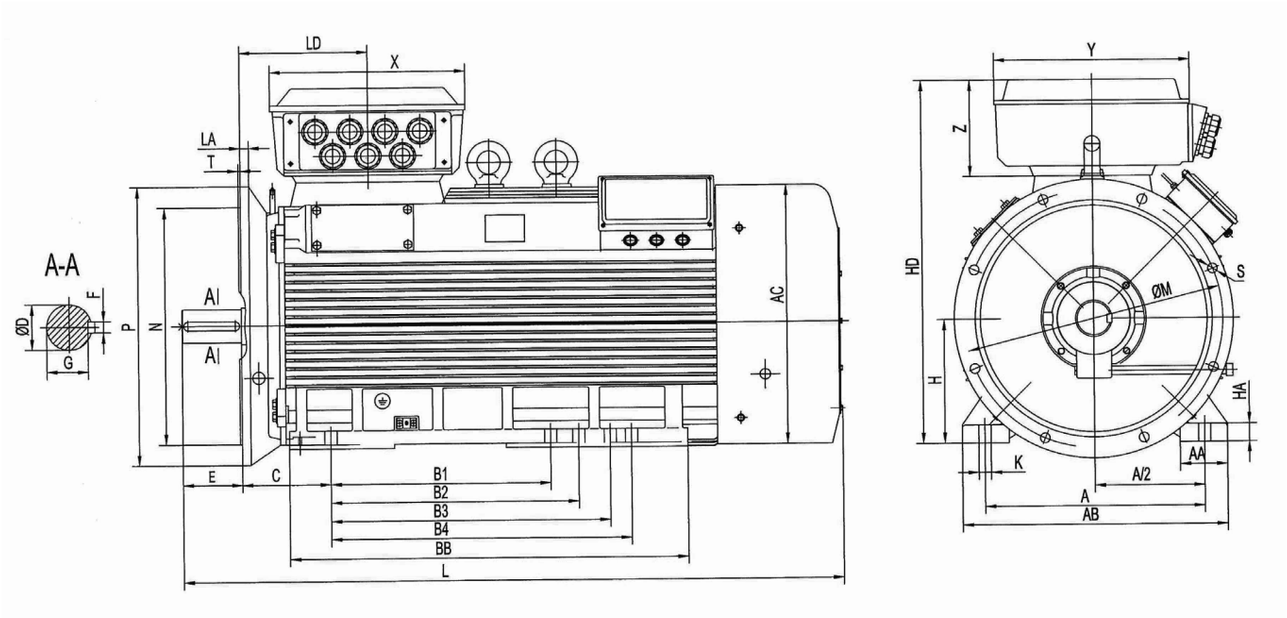

Frame size	Poles	Mounting dimensions (mm)																
		A	B1	B2	B3	B4	C	D	E	F	G	H	K	M	N	P	S	T
355	2	630	630	710	800	—	254	75	140	20	67,5	355	35	740	680	800	8-24	6
	4 ÷ 12	630	630	710	800	—	254	95	170	25	86	355	35	740	680	800	8-24	6
400	2	686/710	710	800	900	—	280	80	170	22	71	400	35x47	940	880	1000	8-28	6
	4 ÷ 12	686/710	710	800	900	—	280	110	210	28	100	400	35x47	940	880	1000	8-28	6
450	2	800	900	1000	1120	1250	280	95	170	25	86	450	35	1120	1180	1250	8-28	7
	4 ÷ 12	800	900	1000	1120	1250	280	120	210	32	109	450	35	1120	1180	1250	8-28	7
500	4 ÷ 12	900	1250	-–	—	—	315	140	250	36	128	500	42x60	1080	1000	1150	8-28	6
560	4 ÷ 12	1000	1400	-–	—	—	355	160	300	40	147	560	42x52	1180	1120	1250	8-28	7

Frame size	Poles	Overall dimensions (mm)										
		AB	AC	HD	BB	LD	HA	AA	X	Y	Z	L
355	2	760	790	1020	1140	368	52	135	430	545	250	1870
	4 ÷ 12	760	790	1020	1140	368	52	135	430	545	250	1900
400	2	870	864	1100	1120	362	45	160	430	545	246	1980
	4 ÷ 12	870	864	1100	1120	362	45	160	430	545	246	2025
450	2	980	1035	1290	1495	400	45	225	560	615	300	2360
	4 ÷ 12	980	1035	1290	1495	400	45	225	560	615	300	2400
500	4 ÷ 12	1080	1095	1365	1600	412	65	180	560	615	300	2550
560	4 ÷ 12	1170	1195	1480	1680	410	76	210	560	615	300	2610

Cable glands : 7 – M63 x 1,5

Mounting arrangement IM2001 (B35) – IC416

When independent axial forced ventilation is required, dimension “L” changes as indicated in the table below:

Frame size	Poles	L
355	2	2050
	4 ÷ 12	2080
400	2	2230
	4 ÷ 12	2255
450	2	2660
	4 ÷ 12	2700
500	4 ÷ 12	2850
560	4 ÷ 12	2910

Informations given in tables are indicative, certified values are available on request.
***SICMEMOTORI** reserves the right to modify designing, technical features and dimensions without prior notice.*

Mounting arrangement IM3011 (V1) – IC411

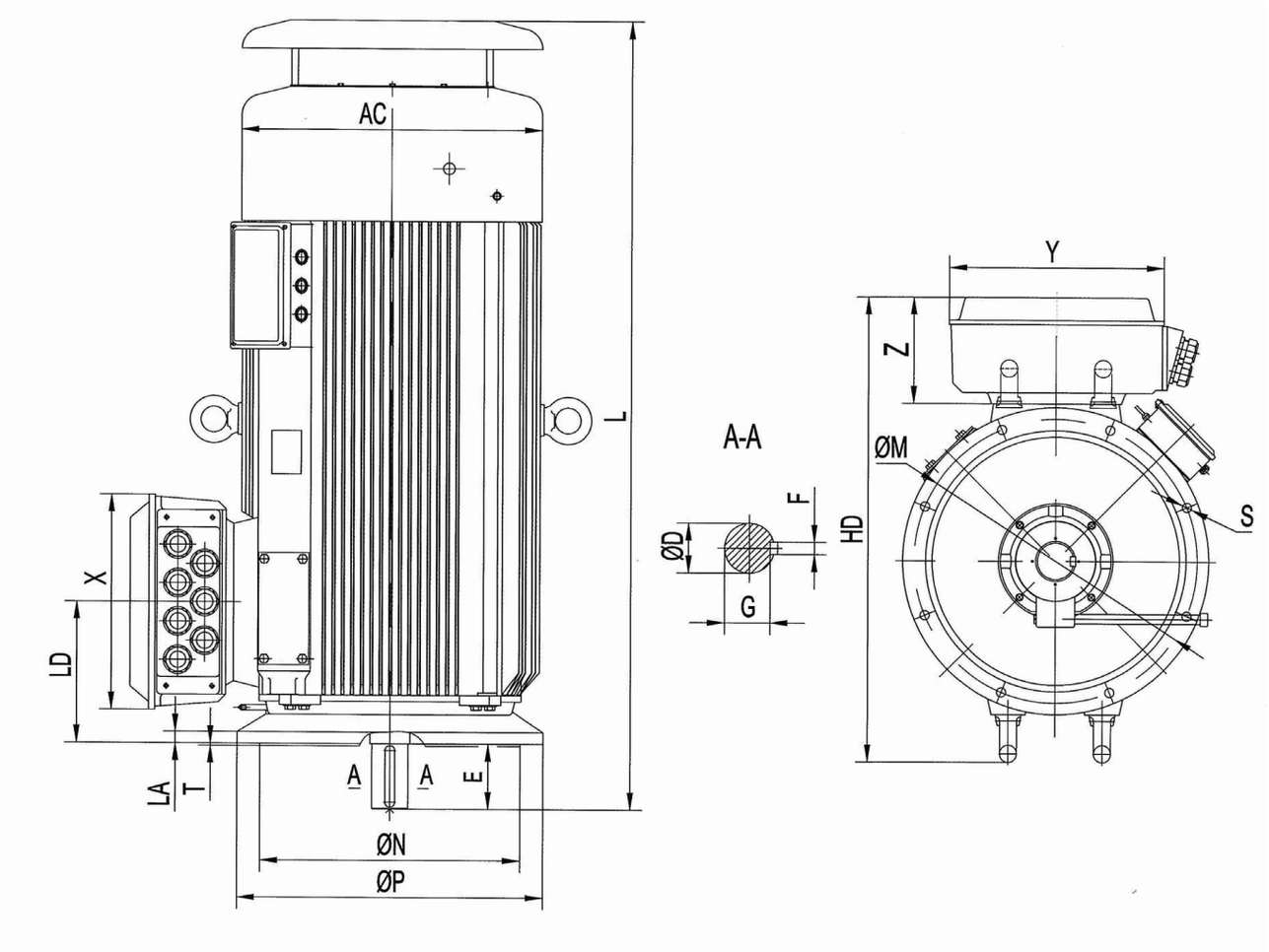

Frame size	Poles	Mounting dimensions (mm)									Overall dimensions (mm)					
		D	E	F	G	M	N	P	S	T	AC	HD	X	Y	Z	L
355	4 ÷ 12	95	170	25	86	740	680	800	8-24	6	790	1190	430	545	250	2290
400	4 ÷ 12	110	210	28	100	940	880	1000	8-28	6	864	1270	430	545	246	2125
450	4 ÷ 12	120	210	32	109	1120	1180	1250	8-28	6	1035	1520	560	615	300	2600
500	4 ÷ 12	140	250	36	128	1080	1000	1150	8-28	6	1095	1576	560	615	300	2700
560	4 ÷ 12	160	300	40	147	1180	1120	1250	8-28	7	1195	1681	560	615	300	2960

Cable glands : 7 – M63 x 1,5

Note: protective roof is standard mounted for V1 motors.

Mounting arrangement IM3011 (V1) – IC416

When independent axial forced ventilation is required, dimension “L” changes as indicated in the table below:

Frame size	Poles	L
355	2	2050
	4 ÷ 12	2080
400	2	2230
	4 ÷ 12	2255
450	2	2660
	4 ÷ 12	2700
500	4 ÷ 12	2850
560	4 ÷ 12	2910

Informations given in tables are indicative, certified values are available on request.
***SICMEMOTORI** reserves the right to modify designing, technical features and dimensions without prior notice*

Motors with independent axial ventilation IC 416

When wide constant torque speed regulation is required, an independent axial fan can be assembled, with separate supply, to guarantee an efficient motor cooling at low speed.
The assembling of a hollow shaft pulse generator can also be done.
The degree of protection of the whole motor is still IP55.
The fan cover is in steel, the fan blades are as indicated in tables of main constructive figures.

	Auxiliary blowers data – Cast iron body				
Frame	Power W	Current A max	Speed rpm	Noise level dBA	Weight kg
355	650	0.91	1500/1800	75	30
400	650	0.91	1500/1800	76	40
450	650	0.91	1500/1800	76	48
500	1100	1.9	1050	77	55
560	1100	1.9	1050	77	65

Pulse generator

A hollow shaft (15 mm diameter) pulse generator can be assembled to control the motor speed; usually, pulse generator terminals are loose. **SICMEMOTORI** can supply the following pulse generators:

Pulses per rev.	Electronic	Supply	Signals voltage	Type
1024*	HTL	4,5÷32Vdc	11-30Vdc	VFS60
1024*	TTL	4,5÷32Vdc	5Vdc	VFS60

**Pulses per revolutions can be programmed in the range 526÷4096ppr*

Other pulse generators, with same fixing dimensions, can be assembled by the customer itself.
Pulse generator can not be mounted for motors with second power shaft end.

Maximum speed

When used with an inverter, motors can be asked to work at speed higher than the nominal one.
The following table gives the max mechanical speed for the motors of this catalogue.

Frame size	Pole Nr.	Max speed (rpm)
AD 355	2	3800
	4	3100
	6	3100
	8	3100
AD 400	2	3500
	4-6-8	2500
AD 450	2	3200
	4	2100
	6-8	1900
AD 500	4	1900
	6	1800
	8	1700
AD 560	4	1800
	6	1800
	8	1800

Informations given in tables are indicative, certified values are available on request.
***SICMEMOTORI** reserves the right to modify designing, technical features and dimensions without prior notice*

Terminal box and cable glands

Terminal box has IP55 degree of protection (provided that supply cable connection is properly made).
The terminal board is normally equipped with 6 terminals, and it is made with non hygroscopic and anti-mold material.
A second terminal box is provided for accessories.

Tolerances

Operating characteristics are guaranteed with the tolerances defined by IEC 60031-1 Standards, as showed in the following table.

Characteristics	Tolerances
Efficiency	Motor power $\leq$ 50 kW: -15% of (1 - η) Motor power > 50 kW: -10% of (1 - η)
Power factor	+1/6 (1- cosφ) Min 0.02 Max 0.07
Locked rotor current	+20% of guaranteed value
Locked rotor torque	-15% + 25% of guaranteed value
Pull out torque	-20% of guaranteed value
Slip	Power motor < 1 kW: $\pm$ 30% of guaranteed value Power motor $\geq$ 1 kW: $\pm$ 20% of guaranteed value

Accessories included as standard

All motors of the AD series are standard equipped with:

- 3 x Pt100 sensors for temperature control of the stator windings
- 1 x PTC 150℃ on the stator windings
- 2 x Pt100 sensors for temperature control of the bearings
- 220V-50Hz single phase AC-heater
- Insulated bearing

Heaters

All motors of the AD series are standard equipped with 4 pcs 99Watt 230V 50Hz.

Informations given in tables are indicative, certified values are available on request.
***SICMEMOTORI** reserves the right to modify designing, technical features and dimensions without prior notice*

Available options and accessories (with overprice)

Option	
IC416 kit with encoder provision	YES
Encoder (hollow shaft)	YES
Terminal box right, left, DE view	YES
2nd power shat end	YES
NDE insulated bearing	Standard
1xPTC (150 ℃)	Standard
Extra PTC (150℃) as back-up	YES
Extra PTC (130℃) for warning	YES
3xPt100 in windings	Standard
Additional 3xPt100 in winding as back-up	YES
DE roller bearing	YES
2xPt100 in bearings	Standard
Special balancing (R, S degree)	YES
Other supply voltage/frequency	YES
Other mounting arrangements (B35-V1)	YES
Anticondensation heaters	Standard
Special painting for saline environment	YES

Main constructive figures

	Frame	355	400	450	500	560
Casing	Material	Cast iron				
Stator	Material	Lamination				
	Feet	Fixed				
End shields	Material	Cast iron				
Flanges	Material	Cast iron				
Bearings	DE	Ball or roller bearings				
	NDE	Ball bearings				
	Lubrication	Grease				
Terminal box	Material	Cast iron				
Fan blades	Material	Plastic	Aluminium			
Fan cover	Material	Steel				
Name plate	Material	Steel				
Stator winding	Material	Copper round wire with special insulation for inverter duty				
Rotor	Material	Lamination				
Cage	Material	Die-casted Al		Copper bars		
Shaft	Material	Steel				
Cooling IC416 *		Steel (on request)				
Insulated NDE bearing		Compulsory for inverter duty motors				

**** on request (with mounting kit)***

Informations given in tables are indicative, certified values are available on request.
***SICMEMOTORI** reserves the right to modify designing, technical features and dimensions without prior notice*

Permissible radial loads for horizontal and vertical motors (F_R)

The following table gives the permissible radial force in N, assuming zero axial force ** and standard ball bearings. In case of higher radial force than given in the table an enforced bearing must be used. The values are based on normal conditions at 50Hz and calculated for 20.000 working hours for 2 pole motors and 40.000 hours for 4, 6 and 8 pole motors. For 60Hz, the values must be reduced by 10%.

		Maximum radial force (F_R) N		
Type	Pole	X_c	$X_{1/2}$ mm	X_{Max}
AD 355	2	16330	15390	8730
	4	28300	25860	14290
	6	32400	29600	16350
	8	35660	32580	18000
AD 400*	2			
	4	33730	31140	19280
	6	38610	35650	22070
	8	42500	39240	24290
AD 450 AD 500 AD 560	2	Please ask SICMEMOTORI		
	4			
	6			
	8			

*Standard motors
** In case F_A and F_R apply both please contact SICMEMOTORI

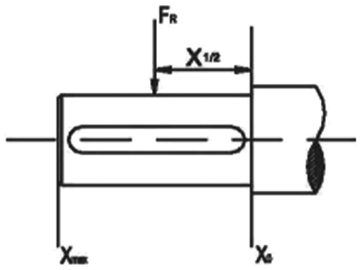

The radial loads acting on the shaft is computable using the following formula:

$F_r = 19.5 \times 10^6 \times (P_n) / (D \times n_{n)} \pm P_p$

D : diameter of the pulley (mm)
P_n : nominal power of the motor (kW)
n_n : nominal speed or the motor (rpm)
k : belt tension factor : 1,25 for toothed belts, 2,35 for trapezoidal belts
F_r : radial load

In case of higher radial force than given in the table an enforced bearing must be used. The values are based on normal conditions at 50Hz and calculated for 20.000 working hours for 2 pole motors and 40.000 hours for 4, 6 and 8 pole motors. For 60Hz, the values must be reduced by 10%.

Permissible axial loads for horizontal and vertical motors (F_A)

The following table gives the permissible axial force in N, assuming zero radial force **. In this case motors must be ordered with standard bearings. In case of higher axial force than given in the table an angular contact bearing must be used. The values are based on normal conditions at 50Hz and calculated for 20.000 working hours for 2 pole motors and 40.000 hours for 4, 6 and 8 pole motors. For 60Hz, the values must be reduced by 10%.
$F_{pressure}$ is calculated fora fixed bearing at the DE.

		Maximum axial force (F_A) N			
Type	Pole	B3 $F_{Pressure}$	B3 F_{pull}	V1 $F_{Pressure}$	V1 F_{pull}
AD 355	2	6100	1850	14000	800
	4	9800	3900	18300	2500*
	6	10500	4700	20700	3500*
	8	12500	6000	21500	3600*
AD 400	2				
	4	11200	3900	18500	1600*
	6	12500	4800	19500	2200*
	8	12800	4950	21500	2900*
AD 450 AD 500 AD 560	2	Please ask SICMEMOTORI			
	4				
	6				
	8				

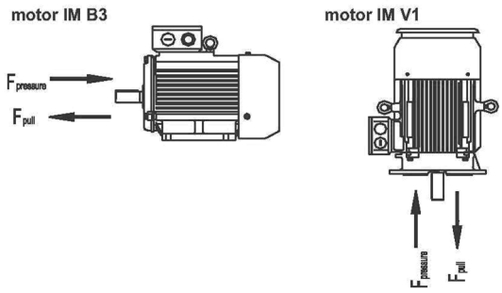

*data calculated on 20.000 working hours
** In case F_A and F_R apply both please contact SICMEMOTORI

Motor spare parts list / Sectional drawing

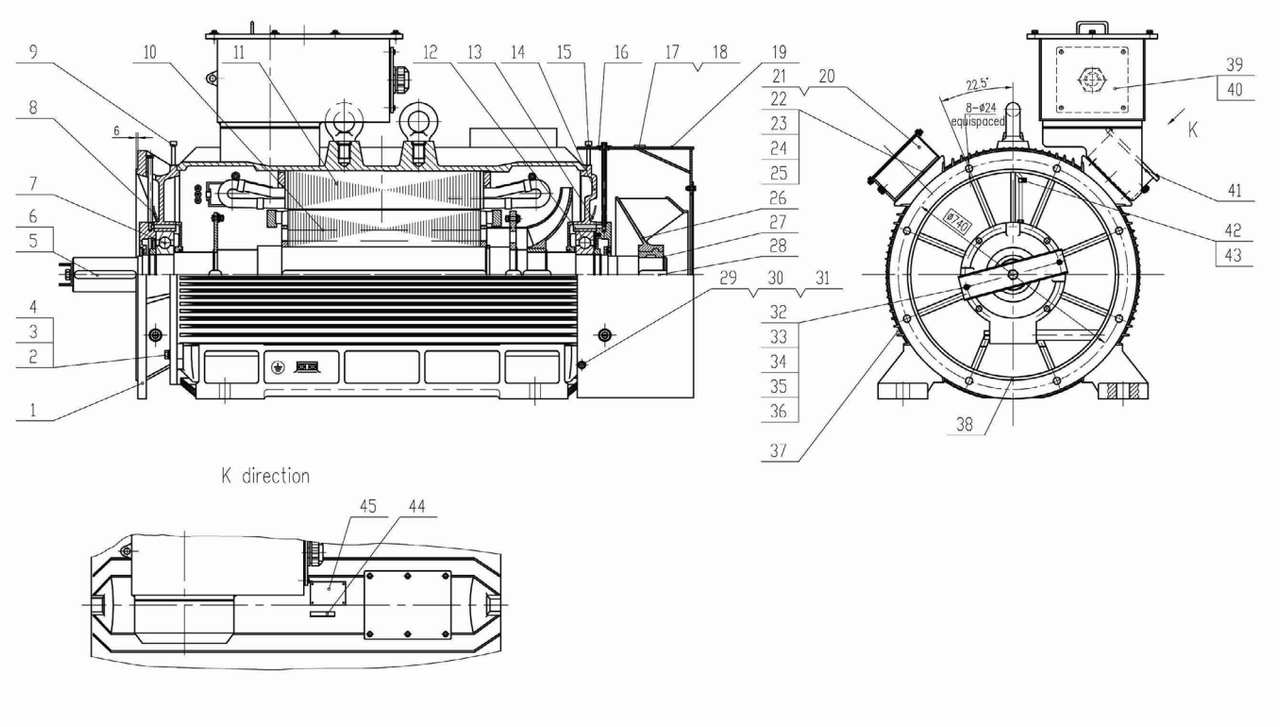

1	DE shield	**24**	Cover plate
2	Bolt	**25**	Rubber seal
3	Washer	**26**	Fan
4	Washer	**27**	Circlip
5	Shaft sleeve	**28**	Key
6	Key	**29**	Bolt
7	DE bearing assembly	**30**	Washer
8	Pt100 for DE bearing	**31**	Washer
9	DE SPM nipple	**32**	Screw
10	Rotor	**33**	Shaft protector
11	Stator	**34**	Nut
12	NDE bearing assembly	**35**	Bolt
13	PT100 for NDE bearing	**36**	Washer
14	NDE shield	**37**	Plug
15	NDE SPM nipple	**38**	Condense hole plug
16	Plug through-hole	**39**	Joint part
17	Rotation label	**40**	Terminal box
18	Rivet	**41**	Connection diagram
19	Fan cover	**42**	Clamp
20	Small terminal box	**43**	Bolt
21	Connection diagram	**44**	Sticker
22	Bolt	**45**	Nameplate
23	Washer		

• SICMELIFT • SICMEWIND • SICMEPLASTIC&RUBBER • SICMEPAPER&PRINT • SICMESHOW • SICMESERVICE • SICMEMETAL • SICMECRANE • SICMESPARES • SICMEMINING • SICMEPRODUCT • SICMEENERGY

Products listed in this catalogue are exclusively designed and built for industrial purposes.
For particular cases in NON-industrial environments, or where other types of protection must be provided (for example against contact with children fingers, etc.), these guards or additional protections must be realized by the Customer.
Any non-observance of the rules for installation, use and maintenance or any modification/tampering with the motor makes the guarantee rights invalid and exempts SICMEMOTORI from any responsibility
All data and indications shown in this catalogue have to be considered only as a guideline.
Any use of the motor differently from the specifications indicated in this catalogue does not involve any liability for SICMEMOTORI as manufacturer
SICMEMOTORI reserves the right to modify at any time and without notice the data, the technical characteristics, the dimensions, the weights and the illustrations.
SICMEMOTORI refuses all responsibility for direct or indirect damages caused by possible errors and/or omissions in the present catalogue
The reproduction, even in part, of the present catalogue must be authorized in writing by SICME MOTORI srl.

WARNING

The motors and the electrical devices feeding them are electrical components installed on machines and industrial systems subject to high voltage. During operation, these components can be dangerous since they are live, they can have non-insulated and rotating parts and they can reach high temperatures. Therefore, they can be extremely harmful to personnel and objects if the instructions for the installation, the use and the maintenance are not respected.
The motors are always supplied complete with the installation, use and maintenance instruction manual. It is necessary to read and understand all the information contained before proceeding to connect and to start up the installation. If the abovementioned documentation is lacking, please ask a copy to SICMEMOTORI.

SICMEMOTORI
WIND OF INNOVATION

SICME MOTORI S.r.l.
Str. Del Francese, 130 - 10156 Torino - Italia
Tel. +39 011 4076311 Fax +39 011 4500047 / 4500367
www.sicmemotori.com - sicmemotori@sicmemotori.com

Member of
EWEA WIND IS POWER
ELECTRICAL APPARATUS SERVICE ASSOCIATION EASA
ANIE
AWEA AMERICAN WIND ENERGY ASSOCIATION
ANICA
AMMA
anacam